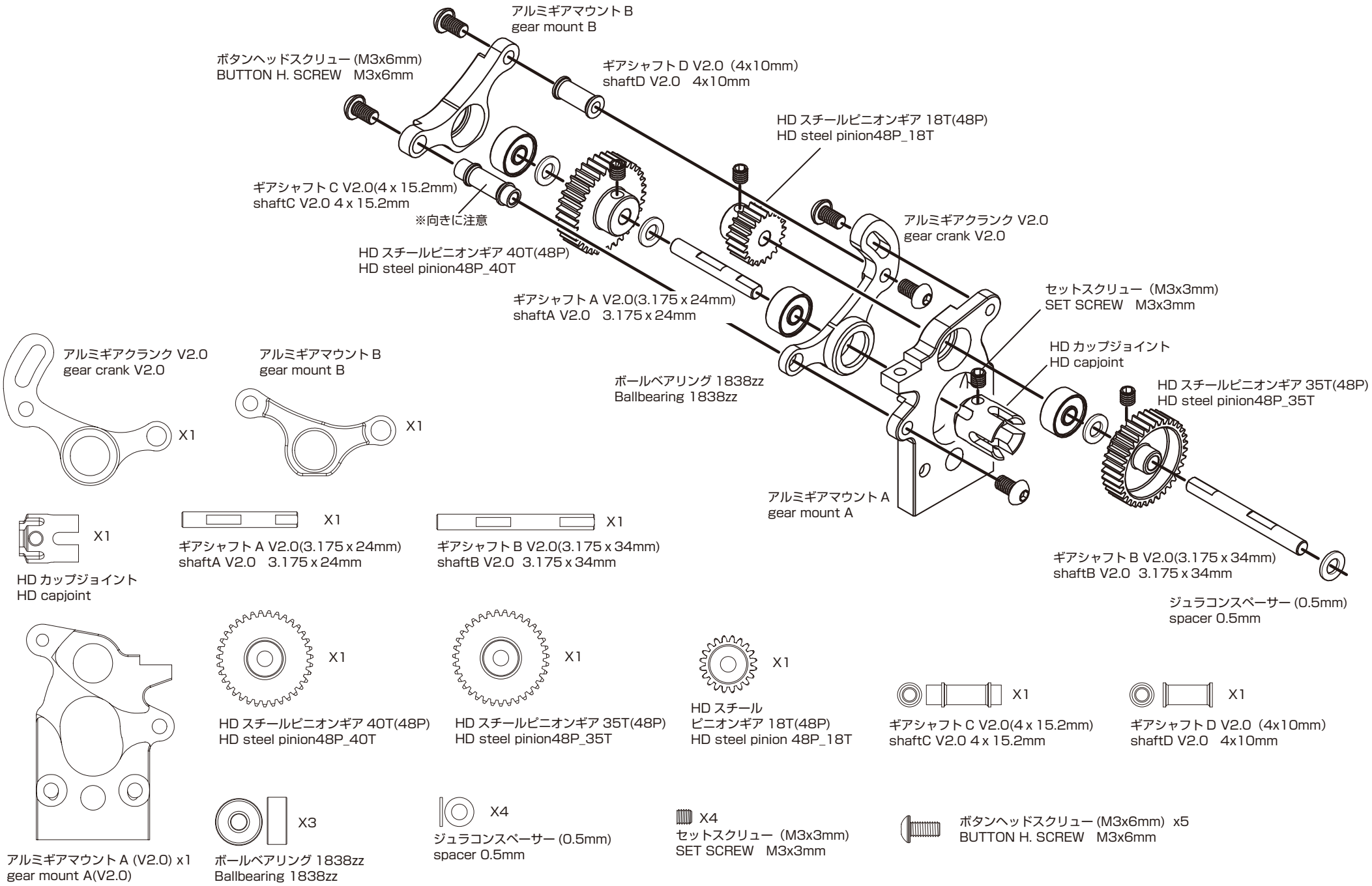KENBRO CONCEPT